Sanctuary
DC 52"

New for 2023/24 - the stunning solid timber sanctuary is now available in a practical 52" size - perfect for bedrooms!

Matte Black
Natural Blades

No Light
F6000/219A
CCT LED
F6001/219A

Matte Black
Teak Blades

No Light
F6000/218A
CCT LED
F6001/218A

Matte White
Whitewash Blades

No Light
F6000/120A
CCT LED
F6001/120A

Matte White
Natural Blades

No Light
F6000/119A
CCT LED
F6001/119A

Matte White
Teak Blades

No Light
F6000/118A
CCT LED
F6001/118A

8 Year
8 Year Motor Warranty
2 year in home + 6 year motor replacement

Technical Data

* All outdoor fans must be an enclosed outdoor area min 1.5m from edge of eave/roof, fully shielded from wind, rain & direct sunlight.

Install Location:	Indoor / Outdoor* & Coastal
Motor Type:	DC
Blade Material:	Solid Timber
Reversible:	Yes
Mount Angle:	0-15˚
Blade Pitch:	10˚ (Approx)
Timer:	1, 4, 8 Hour

Remote

Supplied with remote control

Remote frequency 433 MHz

Anti-corrosive paint applied on all metal components & waterproof sealer on solid timber blades

Performance

Speed	Wattage	RPM	Airflow
1	5.7	69	3,012
2	7.8	94	3,820
3	11.5	113	4,010
4	16.2	133	5,332
5	25.4	155	7,020
6	40	181	8,860

About the CCT LED Light

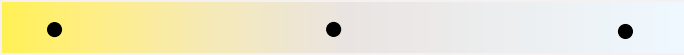

3000k	4000k	6000k
1356 Lumens	1600 Lumens	1421 Lumens

Light Type:	LED (24w)
Dimmable:	Yes (Stepless)

FCSP13-FM001 User Replaceable LED Light Panel. Plug in LED panel can be replaced without an electrician.

CCT & Dimming level memory, turn your fan off / on and the same light settings will be retained

Dimensions

Supplied with 2 extension rods
125mm 250mm

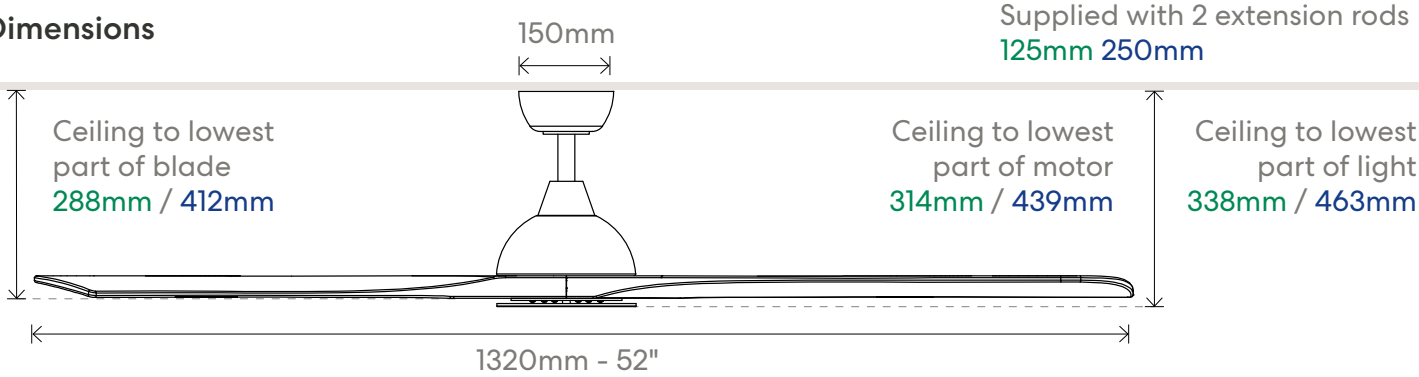

Extension Rods - No Light

Matte White		Matte Black	
K505M/109A	900mm	K505M/209A	900mm
K505M/115A	1500mm	K505M/215A	1500mm

Extension Rods - CCT LED

Matte White		Matte Black	
K5061M/109A	900mm	K5061M/209A	900mm
K5061M/115A	1500mm	K5061M/215A	1500mm

Sanctuary
DC 70"

A stunning fan to improve airflow and cooling in open plan areas and covered outdoor spaces. Now available with or without LED light.

Matte Black
Natural Blades

No Light
KF6010/219A
CCT LED
KF6011/219A

Matte Black
Teak Blades

No Light
KF6010/218A
CCT LED
KF6011/218A

Matte White
Whitewash Blades

No Light
KF6010/101A
CCT LED
KF6011/101A

Matte White
Natural Blades

No Light
KF6010/119A
CCT LED
KF6011/219A

Matte White
Teak Blades

No Light
KF6010/118A
CCT LED
KF6011/118A

Matte Black
Black Blades

No Light
KF6010/202A
CCT LED
KF6011/202A

8 Year
8 Year Motor Warranty
2 year in home + 6 year motor replacement

Technical Data

* All outdoor fans must be an enclosed outdoor area min 1.5m from edge of eave/roof, fully shielded from wind, rain & direct sunlight.

Install Location:	Indoor / Outdoor* & Coastal
Motor Type:	DC
Blade Material:	Solid Timber
Reversible:	Yes
Mount Angle:	0-15˚
Blade Pitch:	10˚ (Approx)
Timer:	1, 4, 8 Hour

Remote

Supplied with remote control

Remote frequency 433 MHz

Anti-corrosive paint applied on all metal components & waterproof sealer on solid timber blades

Performance

Speed	Wattage	RPM	Airflow
1	5.4	55	3,150
2	10.3	86	5,230
3	15	103	6,879
4	20	115	8,520
5	26	128	9,053
6	38	147	11,176

About the CCT LED Light

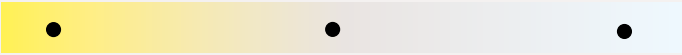

3000k	4000k	6000k
1435 Lumens	1474 Lumens	1461 Lumens

Light Type:	LED (24w)
Dimmable:	Yes (Stepless)

FCSP13-FM004 User Replaceable LED Light Panel. Plug in LED panel can be replaced without an electrician.

CCT & Dimming level memory, turn your fan off / on and the same light settings will be retained

Dimensions

Supplied with 2 extension rods
125mm 250mm

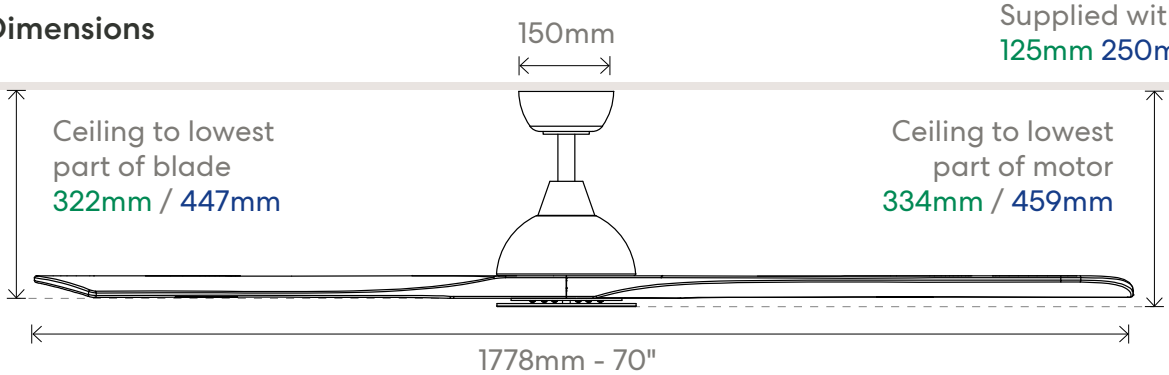

Extension Rods - No Light

Matte White		Matte Black	
K505M/109A	900mm	K505M/209A	900mm
K505M/115A	1500mm	K505M/215A	1500mm

Extension Rods - CCT LED

Matte White		Matte Black	
K5061M/109A	900mm	K5061M/209A	900mm
K5061M/115A	1500mm	K5061M/215A	1500mm

Sanctuary XL DC

Drawing broad strokes from solid timber blades, the Fanco Sanctuary creates an instant refuge from the heat.

Matte Black
Natural Blades

No Light	
KF6020/219A	86"
KF6030/219A	92"
CCT LED	
KF6021/219A	86"
KF6031/219A	92"

Matte Black
Teak Blades

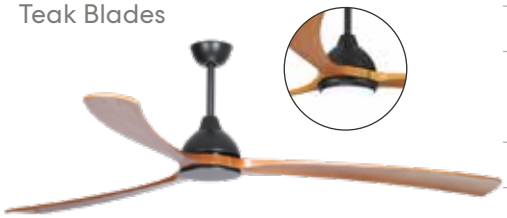

No Light	
KF6020/218A	86"
KF6030/218A	92"
CCT LED	
KF6021/218A	86"
KF6031/218A	92"

Matte White
Whitewash Blades

No Light	
KF6020/101A	86"
KF6030/101A	92"
CCT LED	
KF6021/101A	86"
KF6031/101A	92"

Matte White
Natural Blades

No Light	
KF6020/119A	86"
KF6030/119A	92"
CCT LED	
KF6021/119A	86"
KF6031/119A	92"

Matte White
Teak Blades

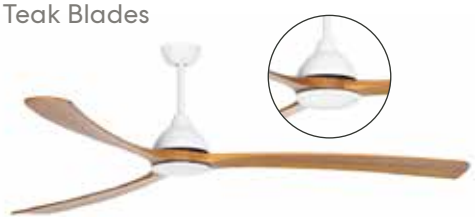

No Light	
KF6020/118A	86"
KF6030/118A	92"
CCT LED	
KF6021/118A	86"
KF6031/118A	92"

Matte Black
Black Blades

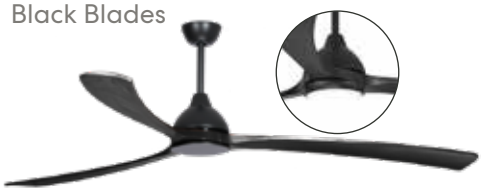

No Light	
KF6020/202A	86"
KF6030/202A	92"
CCT LED	
KF6021/202A	86"
KF6031/202A	92"

8 Year
8 Year Motor Warranty
2 year in home + 6 year motor replacement

Install Location:	Indoor / Outdoor* & Coastal
Motor Type:	DC
Blade Material:	Solid Timber
Reversible:	Yes
Mount Angle:	0-15˚
Blade Pitch:	10˚ (Approx)
Timer:	1, 4, 8 Hour

Remote

Supplied with remote control

Remote frequency 433 MHz

Anti-corrosive paint applied on all metal components & waterproof sealer on solid timber blades

Performance 86"

Speed	Wattage	RPM	Airflow
1	12	78	3,460
2	15.6	87	6,569
3	22.2	98	9,089
4	30	110	11,246
5	39.8	121	12,005
6	54.3	131	14,052

Performance 92"

Speed	Wattage	RPM	Airflow
1	12	75	3,610
2	15.7	86	7,796
3	22.5	93	11,152
4	30.4	105	12,896
5	40	116	14,058
6	54.8	127	16,235

About the CCT LED Light

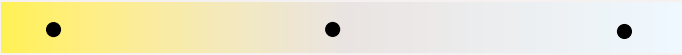

3000k	4000k	6000k
1435 Lumens	1474 Lumens	1461 Lumens

Light Type:	LED (24w)
Dimmable:	Yes (Stepless)

FCSP13-FM004 User Replaceable LED Light Panel. Plug in LED panel can be replaced without an electrician.

CCT & Dimming level memory, turn your fan off / on and the same light settings will be retained

Dimensions

Supplied with a 250mm rod which results in larger than average ceiling to blade drop.

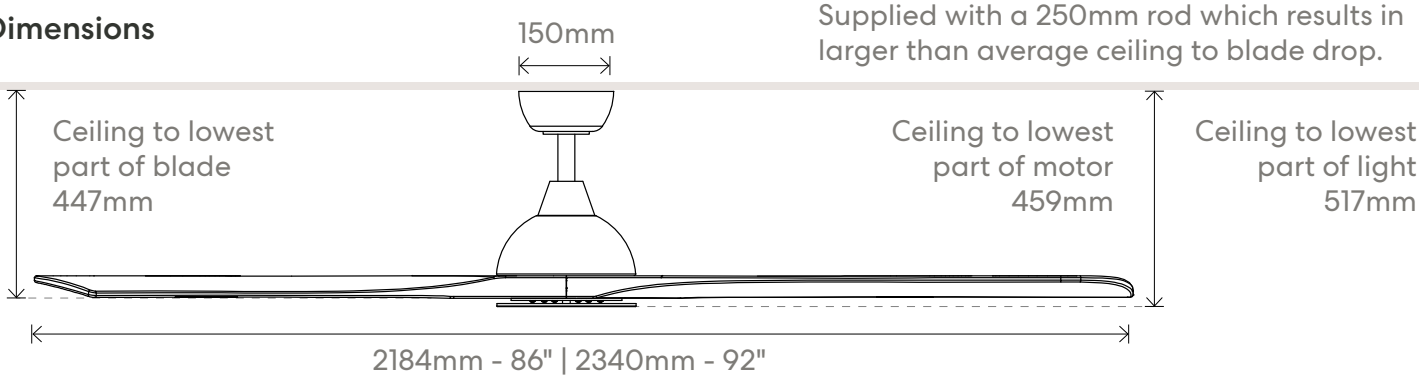

Extension Rods - No Light

Matte White		Matte Black	
K505M/109A	900mm	K505M/209A	900mm
K505M/115A	1500mm	K505M/215A	1500mm

Extension Rods - CCT LED

Matte White		Matte Black	
K5061M/109A	900mm	K5061M/209A	900mm
K5061M/115A	1500mm	K5061M/215A	1500mm